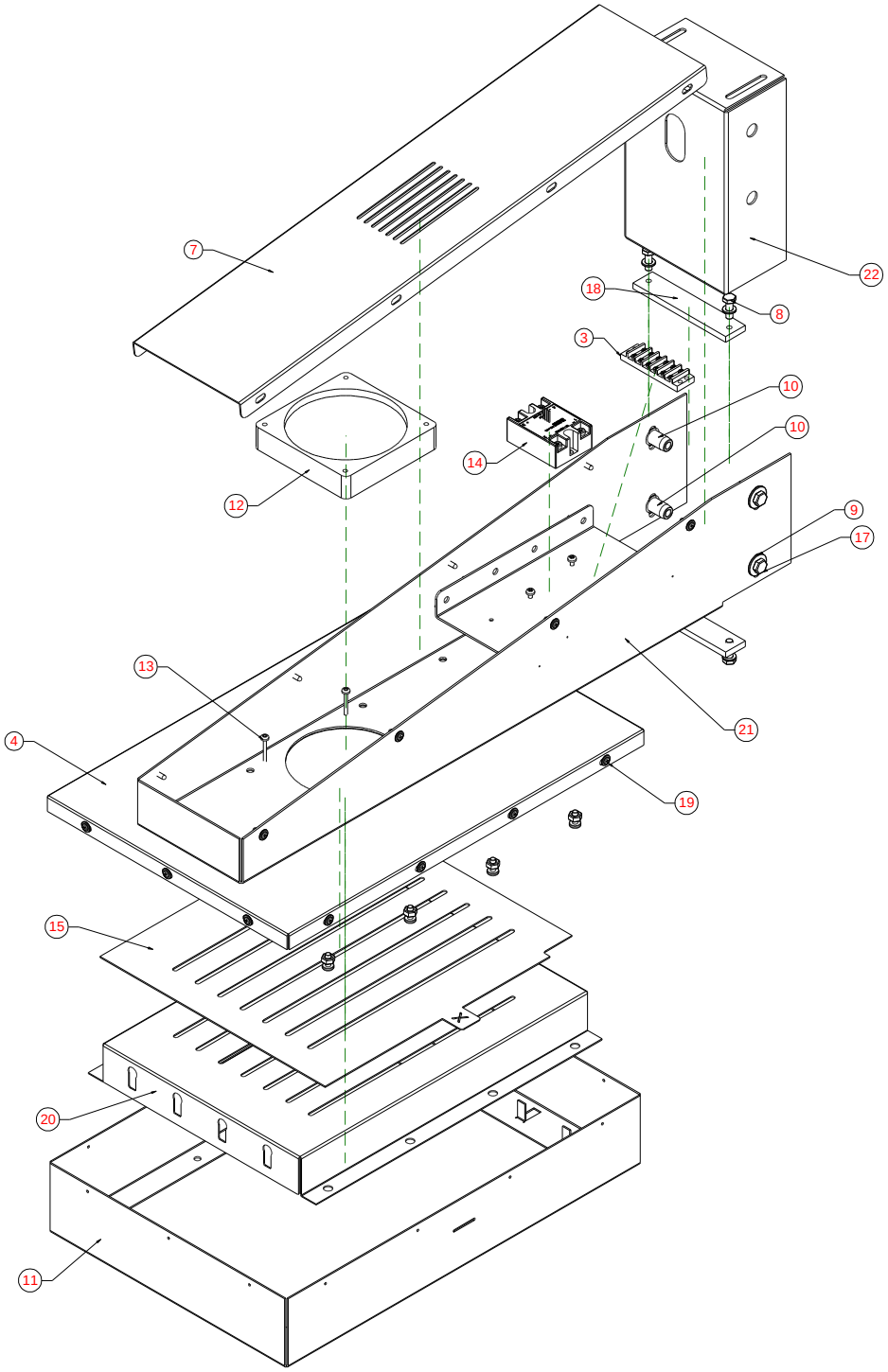Item Numbe	Quantity	Part Number	Part Name
3	1	3277	3277-TERMINAL STRIP 6 POS
4	1	250	250-FLASH COVER V1
7	1	522	522-FLASH SUPPORT COVER V1
8	4	3092	3092- 250 x 750 CAPSCREW
9	4	3143	3143-312 FLAT WASHER
10	4	3144	3144-INSERT .312- 14 GAGE RN51618
11	1	523	523-FLASH BODY 10x14 V1
12	1	3276	3276-MUFFIN FAN 25mm 208-230 VAC
13	4	3006	3006- 6-32x 1.250 BHCS
14	1	3278	3278-SOLID STATE RELAY DOUBLE CONTROL
15	1	307	307-TP10 FLASH REFLECTOR DAMPER XL
17	4	3155	3155- .312 x .75 CAPSCREW
18	2	886	886-FLASH SUPPORT LOCK PLATE
19	19	3014	3014- SHEET METAL SCREW #8 x .500
20	1	308	308-TP10 FLASH REFLECTOR XL
21	1	520	520-FLASH SUPPORT ARM V1
22	1	519	519-FLASH SUPPORT V1